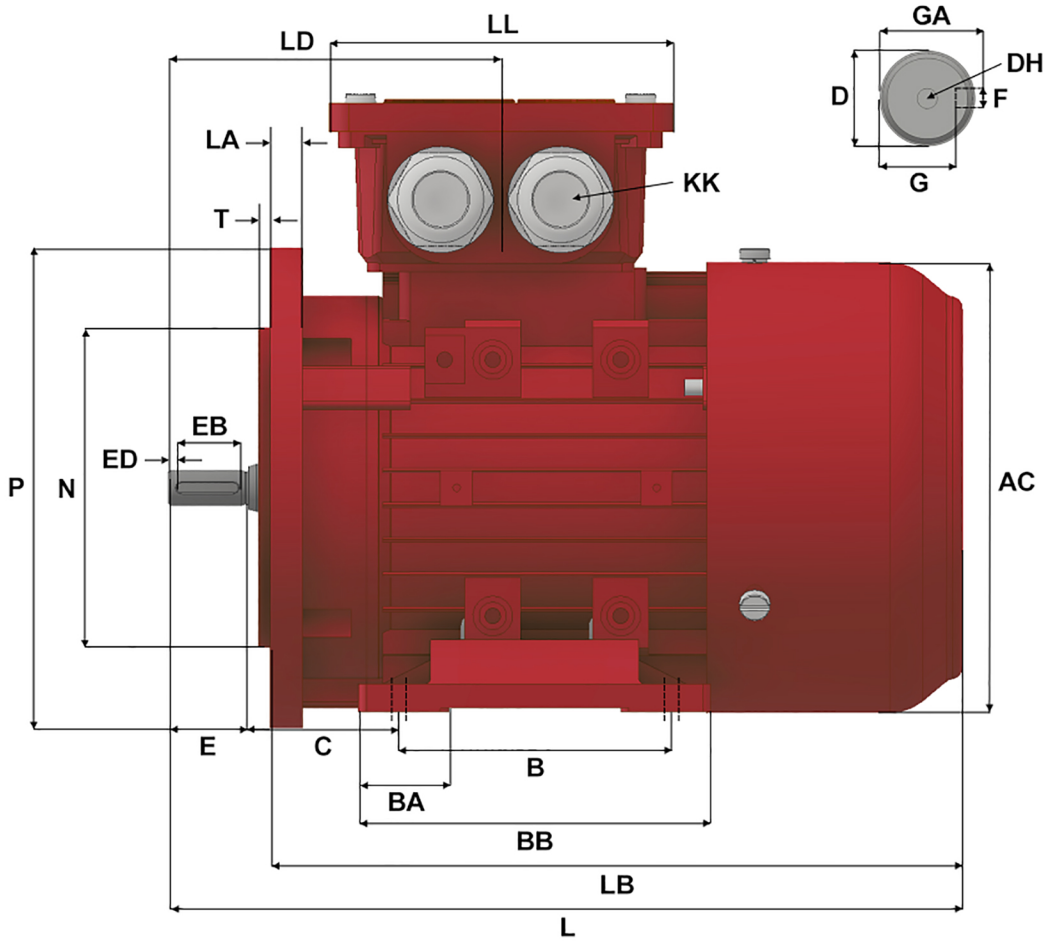

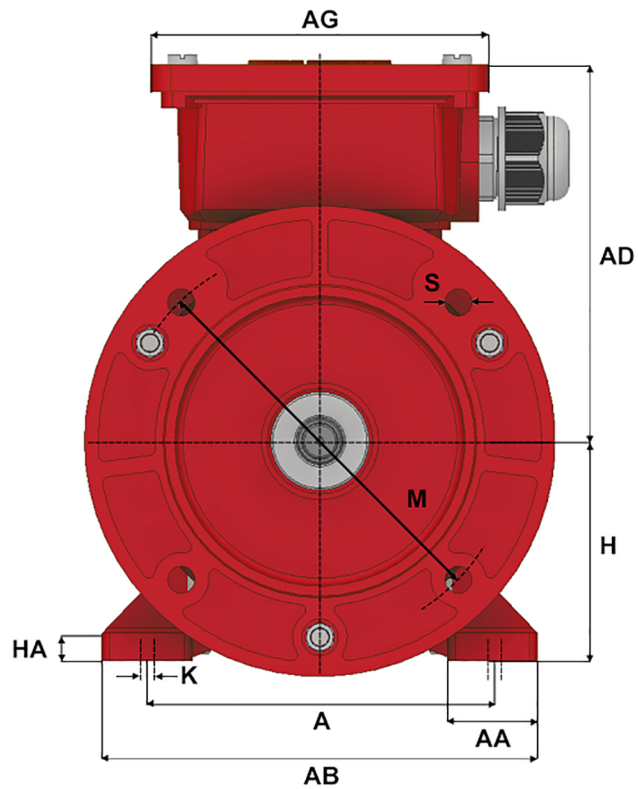

Version: 1JLEM			Revised: 16-02-2023			HP	RPM	FRAME	ENCLOSURE	IJA290S-6-B35		
Customer is responsible in determining that Max Motion product will fit/perform suitably in the intended application						1	1200	90S	TEFC			
A	B	C	D	E	F	G	H	K	L	M	N	P
140	100	56	24	50	8	20	90	10 X 14	315	165	130	200
S	T	AA	AB	AC	AD	AG	BA	BB	DH	EB	ED	GA
12	3,5	37	173	165	138	109	32.5	125	M8 X 19	40	5	27
HA	KK (1)	KK (2)	KK (3)	LA	LB	LD	LL					
10	M20 X 1.5	3/4" NPT	-	12	265	136	109					